Released Form

North Carolina READY End-of-Course Assessment Biology

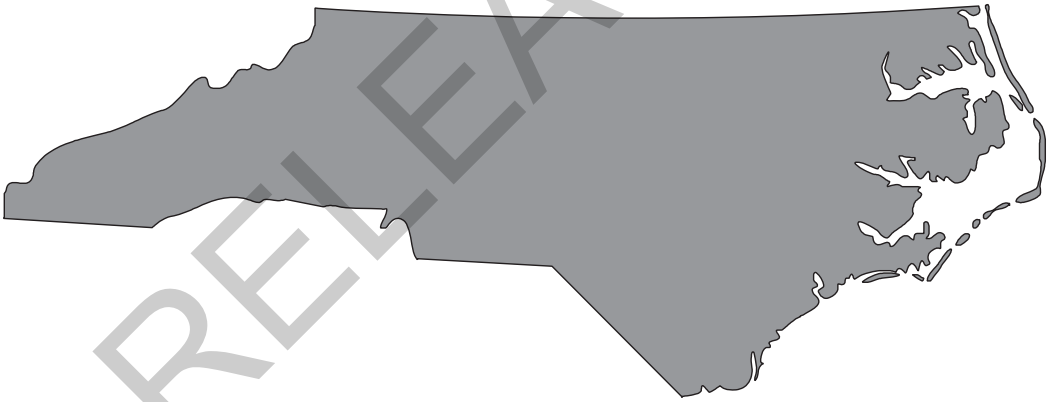

RELEASED

Student Booklet

Academic Services and Instructional Support
Division of Accountability Services

Copyright © 2012 by the North Carolina Department of Public Instruction. All rights reserved.

Sample Questions

S1 A bird-watcher records the movement of migrating birds. In which part of the scientific process is the bird-watcher participating?

A controlling variables

B experimenting

C observing

D hypothesizing

S2 Which deals with the transmission of inherited traits from one generation to another?

A anatomy

B genetics

C ecology

D forensics

RELEASED

1 What will ***most likely*** be the result if all of the mitochondria are removed from a plant cell?

A It will be unable to carry out respiration.

B It will lose water through osmosis.

C It will break down the ribosomes in the cell.

D It will be unable to photosynthesize.

2 What process ***best*** explains how a nerve cell and a muscle cell can both develop from the same fertilized egg?

A differentiation

B natural selection

C selective breeding

D genetic engineering

3 During strenuous exercise, body temperature increases. The body responds to the increase in temperature by sweating, which helps to reduce the body temperature. Which is demonstrated in this situation?

A excretion

B metabolism

C homeostasis

D synthesis

RELEASED

4 Before mitosis begins, which happens before the nucleus starts dividing?

A The cytoplasm separates.

B The DNA replicates.

C The sister chromatids separate.

D The homologous chromosomes cross over.

5 What is the function of autotrophs in the carbon cycle?

A to use oxygen to produce glucose

B to take in excess water

C to use carbon dioxide to produce glucose

D to feed on herbivores

6 Two different populations of birds live in the same area and eat the same types of food. Which ***most likely*** describes the relationship between these two populations of birds?

A competition

B mutualism

C parasitism

D predator-prey

RELEASED

7 What will ***most likely*** happen if the human population continues to grow at current rates?

A There will be fewer natural resources available for future generations.

B There will be an increase in nitrogen levels in the atmosphere.

C There will be a decrease in water pollution.

D There will be an increase in the number of strong hurricanes.

8 A sea turtle has washed up on a remote section of a beach. This is known as a "stranding." Stranding occurs when a dead, sick or injured sea turtle washes up on the shoreline. Which statement ***best*** explains why "stranding" should be reported immediately to local authorities?

A The information can be very useful to biologists and managers who are trying to protect the species.

B The information can be very useful to protect sea turtles from predators.

C The information can be very useful to local fishermen who try to catch fish that sea turtles eat.

D The information can be very useful to tourists who may want to keep sea turtles as pets.

RELEASED

9 A strand of DNA has these bases:

AGC CAT GTA TAC

What is the complementary DNA strand?

A ACG GAT CTA TAG

B TCG GTA CAT ATG

C TGC CTA GAT ATC

D UCG CUA CAU AUG

10 Which statement ***best*** describes the relationship that exists among proteins, DNA, and cells?

A Proteins combine to produce cells, which produce DNA.

B Proteins are made up of DNA, which determines the cells that are produced.

C DNA is made up of proteins, which tell a cell how to function.

D Cells contain DNA, which controls the production of proteins.

11 Why is meiosis important for sexual reproduction?

A It allows the zygote formed from fertilization to have triple the chromosome number of the organism.

B It allows gametes to have twice the original number of chromosomes of the organism.

C It allows gametes to have half the original number of chromosomes of the organism.

D It allows the zygote formed from fertilization to have half the original number of chromosomes of the organism.

12 Which process produces the ***most*** variation within a species?

A asexual reproduction

B sexual reproduction

C mitosis

D cloning

RELEASED

13 Which technique would ***most likely*** be used by forensic scientists?

A gene cloning

B gene therapy

C DNA fingerprinting

D karyotyping

14 Which is one reason scientists produce transgenic organisms?

A to create new species of organisms

B to control microorganisms in the soil

C to prevent habitats from being destroyed

D to treat certain types of diseases

15 This paper-and-pencil version of the assessment cannot display items available only online.

RELEASED

16 The use of pesticides on crops has been a common farming practice for decades. What has been the ***greatest*** effect of natural selection through the use of pesticides on certain insect populations?

A Natural selection has been altered because the insects and their predators are killed.

B The rate of selection is increased because the pesticides do not kill the insects that are naturally resistant to it.

C The rate of selection has decreased because the pesticides kill only young insects.

D The pesticides have altered natural selection by causing the insect DNA to spontaneously mutate.

17 What is the difference between the full classification of organisms and their scientific names?

A The full classification of organisms and their scientific names vary in different countries.

B The scientific names of organisms include the order and family of the organisms, but the full classification includes only the species name.

C The full classification of organisms will include more categories of organisms than their scientific names.

D The scientific names of organisms include a single nomenclature, but the full classification includes various nomenclatures.

18 What type of organic molecules are enzymes?

A carbohydrates

B lipids

C nucleic acids

D proteins

RELEASED

19 What are the subunits of DNA and their function?

A nucleotides that store information

B monosaccharides that provide quick energy for the cell

C lipids that store energy and provide insulation

D proteins that provide the building blocks for the structural components of organisms

20 How does the amount of energy resulting from fermentation compare with that of aerobic respiration?

A Aerobic respiration results in less energy.

B Aerobic respiration results in more energy.

C Each process results in equal amounts of energy.

D Each process results in variable amounts of energy.

RELEASED

21 This diagram shows a plant cell. Which structure is found in a plant cell but is absent in an animal cell?

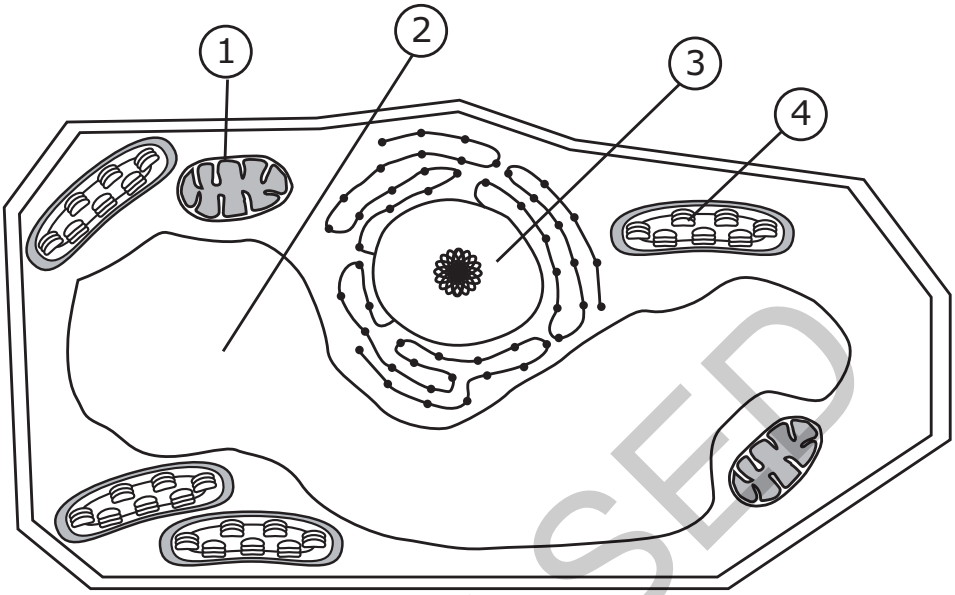

A 1

B 2

C 3

D 4

RELEASED

22 Which ***best*** explains why muscle cells are different from blood cells?

A A mutation occurs during the development of muscle cells but not in blood cells.

B Different genes are activated in muscle cells than in blood cells.

C Muscles cells experience different environmental influences than blood cells.

D Muscle cells are produced by the brain, but blood cells are produced by the heart.

23 A freshwater plant is placed in a container of saltwater. What will ***most likely*** happen to the cells of the plant?

A They will swell because water will move into them.

B They will swell because salt will move into them.

C They will shrink because water will move out of them.

D They will shrink because salt will move out of them.

24 During which phase of the cell cycle is the cell growing and preparing for cellular division?

A cytokinesis

B anaphase

C prophase

D interphase

RELEASED

25 The males of a bird species do a “dance” and “sing a song” each spring. What is the ***main*** purpose of these behaviors?

A to scare off young birds

B to imprint young birds

C to clean their feathers

D to attract female birds

26 The yucca plant releases a strong scent at night when the yucca moth is active. The yucca moth, attracted by the scent, gathers pollen from the yucca flower. The yucca moth then deposits her eggs and the pollen on another plant. This ensures that the plant will be cross-pollinated and that the yucca moth larvae have a steady food supply. Which relationship does this ***best*** illustrate?

A commensalism

B mutualism

C parasitism

D predation

RELEASED

27 Which environmental concern is ***most*** associated with burning fossil fuels?

A global climate change

B pollution of ocean waters

C ozone layer destruction

D decrease in levels of atmospheric carbon dioxide

28 The construction of a new coal-burning power plant would have the ***greatest*** impact on which environmental issue?

A depletion of the ozone

B production of acid rain

C release of radiation

D increase in deforestation

29 A segment of DNA has this sequence:

ATA GCA CAT GTA

What is the mRNA sequence transcribed from this segment?

A TAT CGT GTA CAT

B TAT GCT CTA GAT

C UAU CGU GUA CAU

D UAU GCU CUA CAU

RELEASED

30 This chart shows which amino acids are coded for by different combinations of mRNA nucleotides.

Codons in mRNA

First Base	Second Base								Third Base
	U		**C**		**A**		**G**		
	UUU	Phenylalanine	UCU	Serine	UAU	Tyrosine	UGU	Cysteine	**U**
U	UUC	Phenylalanine	UCC	Serine	UAC	Tyrosine	UGC	Cysteine	**C**
	UUA	Leucine	UCA	Serine	UAA	Stop	UGA	Stop	**A**
	UUG	Leucine	UCG	Serine	UAG	Stop	UGG	Tryptophan	**G**
	CUU	Leucine	CCU	Proline	CAU	Histidine	CGU	Arginine	**U**
C	CUC	Leucine	CCC	Proline	CAC	Histidine	CGC	Arginine	**C**
	CUA	Leucine	CCA	Proline	CAA	Glutamine	CGA	Arginine	**A**
	CUG	Leucine	CCG	Proline	CAG	Glutamine	CGG	Arginine	**G**
	AUU	Isoleucine	ACU	Threonine	AAU	Asparagine	AGU	Serine	**U**
A	AUC	Isoleucine	ACC	Threonine	AAC	Asparagine	AGC	Serine	**C**
	AUA	Isoleucine	ACA	Threonine	AAA	Lysine	AGA	Arginine	**A**
	AUG	Methionine or start	ACG	Threonine	AAG	Lysine	AGG	Arginine	**G**
	GUU	Valine	GCU	Alanine	GAU	Aspartic Acid	GGU	Glycine	**U**
G	GUC	Valine	GCC	Alanine	GAC	Aspartic Acid	GGC	Glycine	**C**
	GUA	Valine	GCA	Alanine	GAA	Glutamic Acid	GGA	Glycine	**A**
	GUG	Valine	GCG	Alanine	GAG	Glutamic Acid	GGG	Glycine	**G**

Which amino acids are coded for by an mRNA segment that reads CAG GUG?

A arginine and valine

B isoleucine and arginine

C glutamine and valine

D valine and isoleucine

RELEASED

31 This paper-and-pencil version of the assessment cannot display items available only online.

32 The inheritance of short wings in *Drosophila* fruit flies is an x-linked, recessive trait. Which would ***most likely*** result if a short-winged female mates with a long-winged male?

A All offspring will be short-winged.

B All females will be long-winged, and all males will be short-winged.

C All females will be short-winged, and all males will be long-winged.

D Half of the males and females will be short-winged, and half will be long-winged.

RELEASED

33 This diagram shows the DNA fingerprints of a baby and four couples.

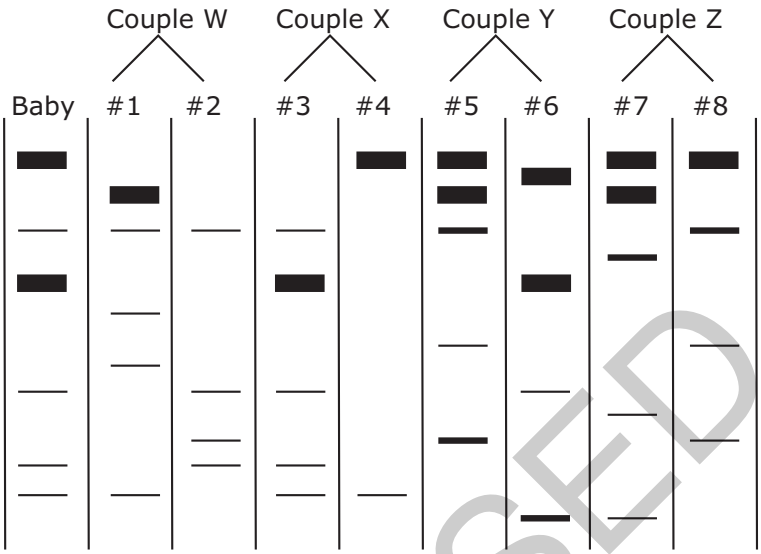

A hospital wants to identify the parents of a baby. Based on the DNA fingerprints, which couple is ***most likely*** the parents of the baby?

A Couple W

B Couple Z

C Couple Y

D Couple X

RELEASED

34 Which is a step in the process of producing transgenic bacteria?

A A plasmid is used to replace a faulty gene in a human cell.

B A chain of bacterial amino acids is inserted into human DNA.

C A human gene is inserted into a bacterial plasmid.

D A mutation is produced in a bacterial cell.

35 Which would ***most likely*** produce a mutation that is passed on to offspring?

A radiation changing the DNA sequence in skin cells

B a gamete with an extra chromosome forming

C tobacco smoke altering the genes in lung cells

D exposure to chemicals altering nerve cell function

36 A large population of cockroaches was sprayed with an insecticide. A few of the cockroaches survived and produced a population of cockroaches that was resistant to this spray. What can ***best*** be inferred from this example?

A A species will adapt no matter what the environment.

B The environment has no effect on the survival of an organism.

C Insecticides cause mutations that are passed on to the next generation.

D Individuals with favorable variations survive and reproduce.

RELEASED

37 This diagram shows a cladogram of six species based on amino acid similarities.

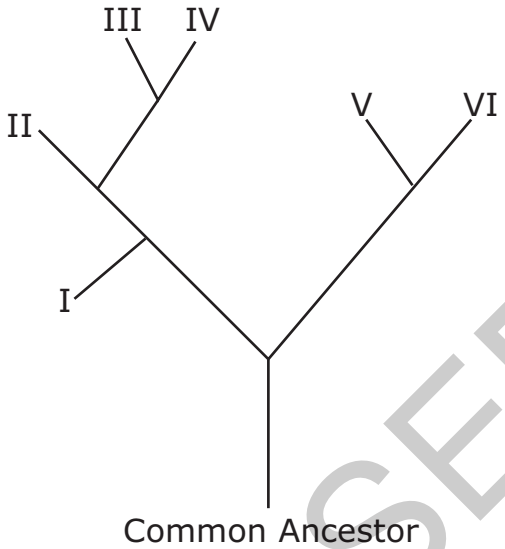

Which two species are the ***most closely*** related?

A I and II

B II and IV

C I and V

D V and VI

RELEASED

38 Which type of molecule do whales use for energy storage and insulation?

A DNA

B glucose

C fat

D starch

39 Which ***most directly*** controls the rate at which food is broken down to release energy?

A enzymes

B hormones

C nucleic acids

D vitamins

40 If energy is needed to move materials into or out of a cell, what is ***most likely*** occurring?

A active transport

B passive transport

C osmosis

D diffusion

41 How are prokaryotic and eukaryotic cells similar?

A Both contain a nucleus.

B Both contain ribosomes.

C Both contain membrane-bound organelles.

D Both contain cell walls.

RELEASED

42 How does DNA code for proteins in a cell?

A by creating a new double helix structure

B by using its phosphate and sugar molecules

C by adding more hydrogen bonds to its structure

D by arranging certain nitrogen bases of the cell in a particular order

43 What is the result when a single cell reproduces by mitosis?

A two cells with genetic material identical to the parent cell

B two cells with half the genetic material of the parent cell

C four cells with half the genetic material of the parent cell

D four cells with genetic material identical to the parent cell

RELEASED

44 These diagrams represent a Euglena and a Paramecium.

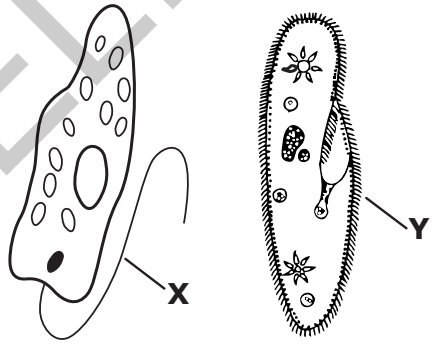

Euglena Paramecium

Which function do structures **X** and **Y** have in common?

A digestion

B gathering food

C movement

D reproduction

45 At night, moths travel toward light. Which type of behavior does this describe?

A habituation

B imprinting

C innate behavior

D learned behavior

46 A field ecologist wants to determine the interactions of various populations of organisms living in a large grassland field. Which method is ***best*** for conducting this study?

A consulting with local farmers about the diversity of organisms in the field

B dividing the field in half, walking over it, counting organisms, and then doubling the numbers

C walking over the entire field, collecting the organisms, and then compiling a total

D observing the behaviors of different types of organisms several times during the year

47 Which environmental factor would cause the ***greatest*** decrease in the number of species of plants and animals living in some of the lakes in the United States?

A increase in dissolved oxygen levels

B global warming

C ozone destruction

D acid rain

RELEASED

48 If worldwide deforestation is not regulated, what could ***most likely*** result?

A Acid rain could lower the pH of rivers and lakes to dangerous levels for aquatic life.

B CO_2 levels in the atmosphere could increase and contribute to global warming problems.

C Plants and animals could become better adapted to living in desert conditions.

D Future generations of humans could have an excess of wood and paper products.

49 This paper-and-pencil version of the assessment cannot display items available only online.

50 How would overexposure to X-rays affect ***most*** animal cells?

A It would increase cell specialization in organs.

B It would change the sequence of DNA nucleotides in affected cells.

C It would produce new nucleotides for DNA molecules.

D It would cause an increase in red blood cell production.

RELEASED

51 How are sexual reproduction and asexual reproduction different?

A Sexual reproduction produces offspring identical to the parents, but asexual reproduction produces offspring with traits from both parents.

B Asexual reproduction produces offspring identical to the parents, but sexual reproduction produces offspring with traits from both parents.

C Sexual reproduction only occurs in multicellular organisms, but asexual reproduction only occurs in unicellular organisms.

D Asexual reproduction only occurs in multicellular organisms, but sexual reproduction only occurs in unicellular organisms.

52 Which characteristic is present in offspring produced by sexual reproduction, but is missing in offspring produced by asexual reproduction?

A an identical copy of parent chromosomes

B twice the number of parent chromosomes

C only half the number of parent chromosomes

D an independent assortment of parent chromosomes

53 Two people believe they are related. Which would be the ***best*** technique to determine if they are related?

A testing blood types

B comparing DNA

C examining karyotypes

D testing for genetic disorders

RELEASED

54 Which will ***most likely*** cause variations to occur within a species?

A competition

B mutation

C mutualism

D predation

55 In which populations does genetic drift most often occur?

A in small populations

B in large populations

C in marine populations

D in terrestrial populations

56 What is the ***best*** explanation for the continual changes in the classification system of organisms?

A All organisms struggle for existence and become extinct.

B All organisms compete to be at the top of the food chain.

C Technological advances have allowed scientists to better compare organisms.

D More species have been discovered, but scientists have not analyzed all the data.

RELEASED

57 The diagram below shows a phylogenetic tree for animals.

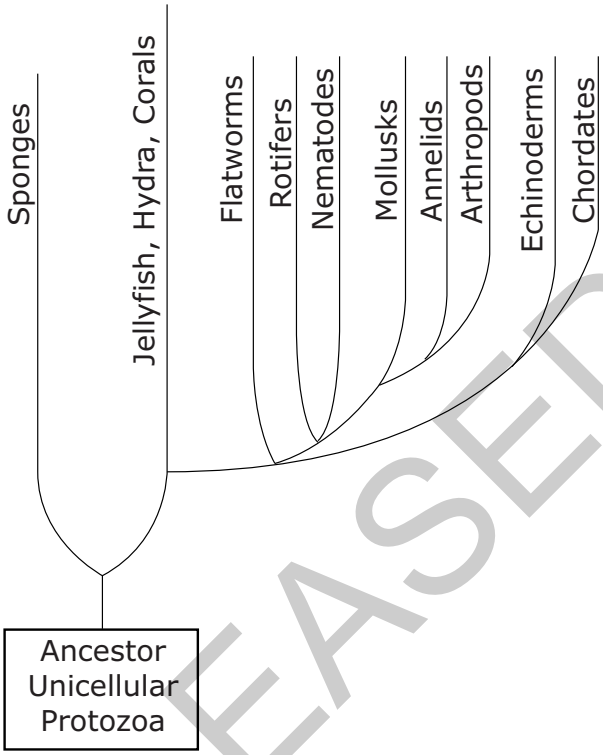

RELEASED

Which two groups of organisms have the ***most*** genetic differences?

A rotifers and nematodes

B mollusks and annelids

C mollusks and arthropods

D echinoderms and chordates

58 Which factor ***most*** affects the order of amino acids in a protein?

A the DNA located in the nucleus of the cell

B the cell in which the protein is located

C the amount of ATP available for the cell's use

D the area in a cell where proteins are produced

59 Which statement ***best*** compares aerobic and anaerobic respiration?

A Less ATP is generated during anaerobic respiration than during aerobic respiration.

B More water is generated during anaerobic respiration than during aerobic respiration.

C More oxygen is generated during anaerobic respiration than during aerobic respiration.

D Less lactic acid is generated during anaerobic respiration than during aerobic respiration.

60 Which would be the ***best*** evidence that a cell is using active transport to move a substance across its cell membrane?

A Substances are moving rapidly across the cell membrane.

B ATP is being rapidly consumed near the cellular membrane.

C Substances are moving from high to low concentrations.

D Substances are moving through channels in the cell membrane.

RELEASED

BIOLOGY RELEASED FORM

Directions:

This is the end of the Biology test.

1. **Put all of your papers inside your test book and close your test book.**

2. **Stay quietly in your seat until your teacher tells you that testing is finished.**

RELEASED

STOP